REVISION RECORD			
LTR	DESCRIPTION	DATE	BY
E	ITEM 1 WAS 6007-0353 HEX HEAD BOLT, ITEM 2 WAS 6007-0351 HEX HEAD BOLT	6/6/97	15666 RN
F	L.C. BASE WAS 19" X 35 1/2".	6/15/00	20876 BAS/MLS
G	SHOW GROUND ROD LOCATED OFF THE FOUNDATION TO INDICATE USING THE CUSTOMER'S A.C. POWER DISTRIBUTION GROUND ROD.	3/24/06	23438 JAT/SC
H	ALL ANCHOR BOLTS NOW 15" LONG: DELETE ITEM 1 ANCHOR BOLT 0849-B092-08 ITEM 2 QUANTITY WAS 104	1/17/13	21256 JAT

PIER LOADINGS AT COOPER E-80 LOAD RATING	
PIER	LOADING
(2)	101 KIP
(3)	104 KIP

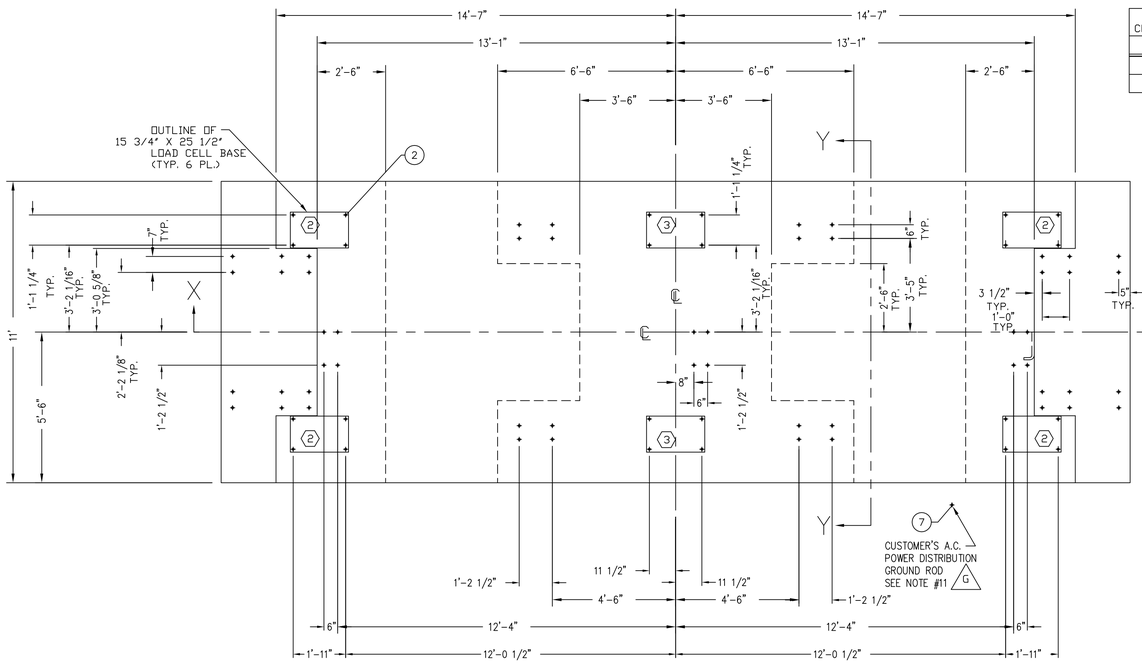

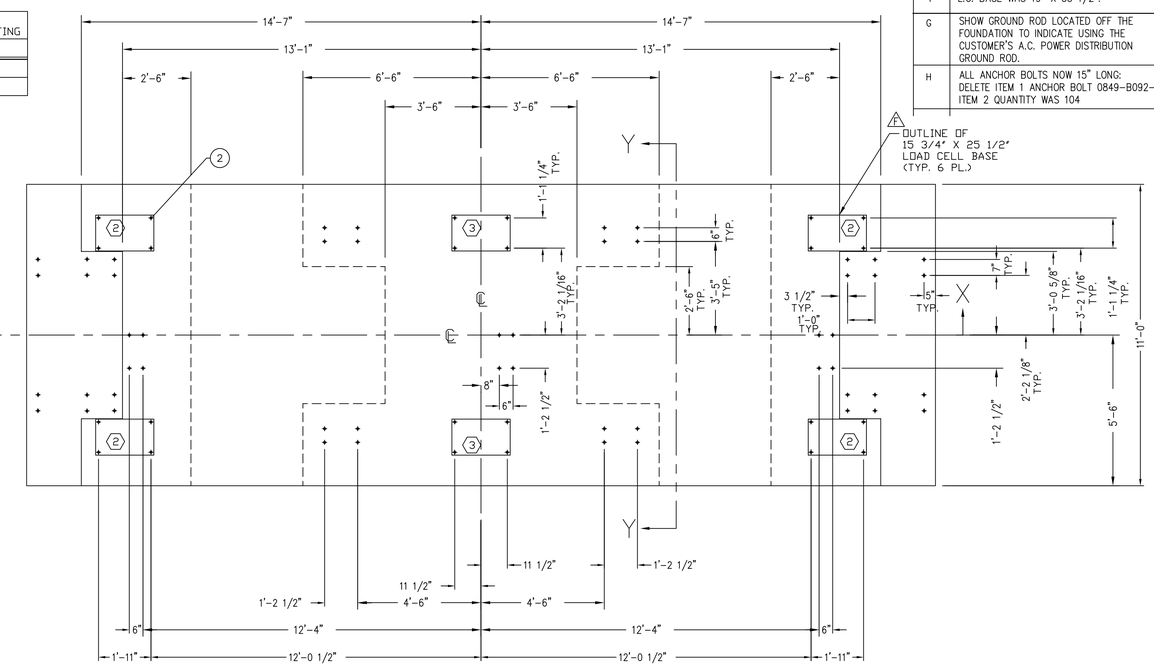

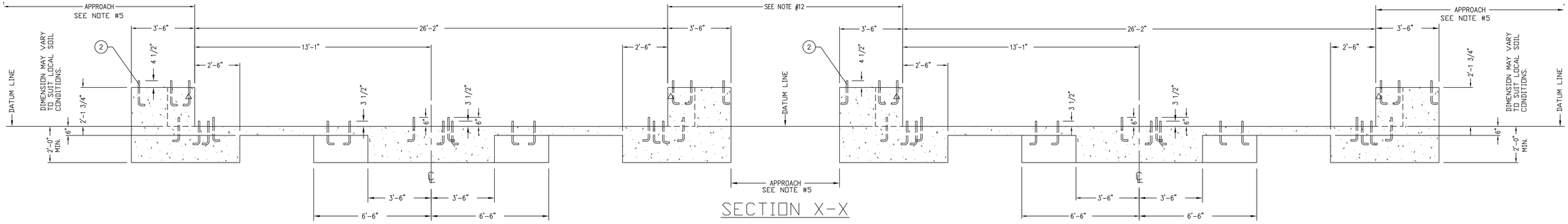

SECTION X-X

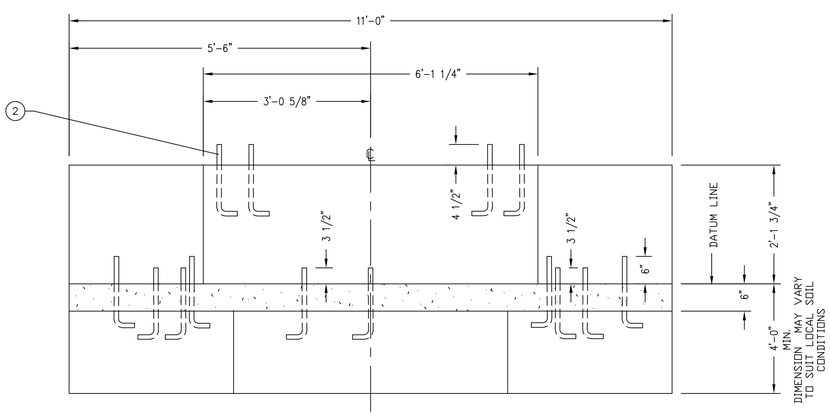

SECTION Y-Y

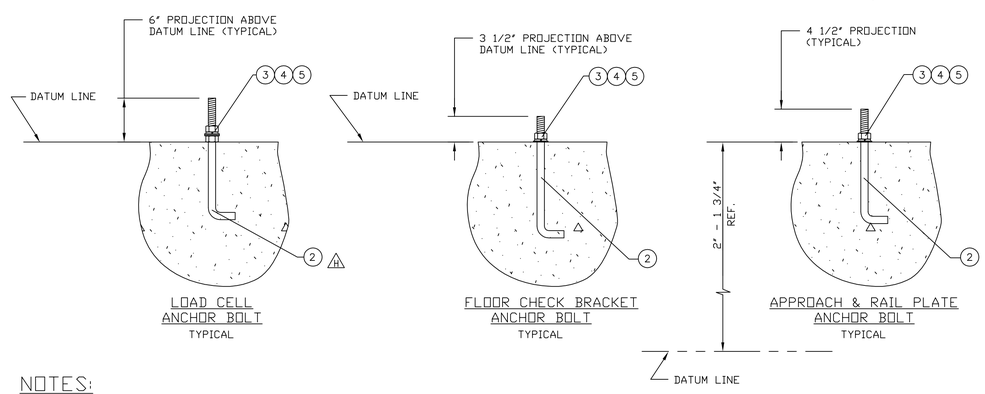

LOAD CELL ANCHOR BOLT TYPICAL

FLOOR CHECK BRACKET ANCHOR BOLT TYPICAL

APPROACH & RAIL PLATE ANCHOR BOLT TYPICAL

FOR REFERENCE ONLY!

NOTES:

1. THE MINIMUM SOIL BEARING SHALL BE 4,000 POUNDS PER SQUARE FOOT. THE MINIMUM CONCRETE STRENGTH SHALL BE 3,000 POUNDS PER SQUARE INCH, 28 DAY. FOR UNUSUAL SOIL CONDITIONS OR DEEP FROST PENETRATION, ALTER FOUNDATION AS REQUIRED. FOOTINGS MUST BE 12 INCHES BELOW FROST LINE.
2. THE SCALE FOUNDATION SHALL BE CONSTRUCTED OF REINFORCED CONCRETE. THE QUALITY OF MATERIALS AND METHODS OF MIXING AND PLACING THE CONCRETE SHALL CONFORM TO THE A.R.E.A. SPECIFICATIONS FOR REINFORCED CONCRETE PART I CHAPTER 8. THE CUSTOMER SHALL CONSTRUCT THE FOUNDATION TO SUIT LOCAL SOIL CONDITIONS.
3. CARDINAL SCALE MFG. CO. SHALL NOT BE RESPONSIBLE FOR THE STABILITY OF THE FOUNDATION.
4. WORK FROM CENTERLINES WHEN ERECTING FORMS AND SETTING BOLTS. TOPS OF PIERS AND WALLS MUST BE SMOOTH, LEVEL, AND TRUE TO PLANE.
5. SEE DRAWING 0860-D007 FOR RECOMMENDED APPROACHES.
6. TWO INCHES HAS BEEN ALLOWED IN HEIGHT ABOVE THE DATUM LINE FOR GROUTING. STANDARD MILL TOLERANCE STEEL DIMENSIONS ARE NOMINAL AND MAY VARY.
7. APPROX. 127 CU. YDS. EXCAVATION REQUIRED FOR THE FOUNDATON AS SHOWN.
8. APPROX. 46 CU. YDS. CONCRETE REQUIRED FOR THE FOUNDATION AS SHOWN.
9. TRANSMISSION CABLE FROM LOAD CELL TO INDICATOR MUST BE IN ONE INCH MINIMUM SIZE STEEL CONDUIT AT LEAST 24 INCHES FROM THE CLOSEST ELECTRICAL LINE. THEY MAY CROSS AT 90° ONLY. (LOCATION OPTIONAL).
10. DO NOT WELD ON THE STRUCTURE WHILE THE ELECTRONIC LOAD CELLS ARE IN THE SYSTEM.
11. SEE DRAWING 3502-C138-ES FOR ELECTRICAL GROUNDING INSTRUCTIONS.
12. CUSTOMER TO SPECIFY DISTANCE BETWEEN SCALES.

QTY.	QTY.	QTY.	ITEM	PART/DWG. NUMBER	DESCRIPTION	MATERIAL OR SOURCE	WT. EACH
		1	7	3502-B011-54	GROUNDING KIT		47.4
			6				
		200	5	6024-0027	FLAT WASHER	1"	0.19
		152	4	6024-0060	LOCK WASHER	1"	0.08
		200	3	6013-0165	HEX NUT	1"-8 UNC-2B	0.29
		152	2	0849-B091-08	ANCHOR BOLT	1"-8 UNC-2A X 15" 4 1/2" THREAD LENGTH	3.69
			1				
		-0A	ASSY				
		780.3	WT.	PARTS/MATERIAL LIST			

UNLESS OTHERWISE SPECIFIED TOLERANCE ON DIMENSIONS ARE:
ANGLES ± 1/2°
INTEGERS/FRACTIONS ± 1/16 IN.
DECIMALS (.X) ± .03 IN.
DECIMALS (.XX) ± .01 IN.
DECIMALS (.XXX) ± .005 IN.
NOTE: WHOLE NUMBERS MUST BE WRITTEN XX.000 TO INVOKE DECIMAL TOLERANCES.

Cardinal® Cardinal Scale Manufacturing Co. WEBB CITY, MISSOURI • USA • 64870

CARDINAL DETECTO FULLER WEIGHING SYSTEMS

TITLE FOUNDATION PLAN: E-80 FULL ELECTRONIC LOW PROFILE RAILWAY TRACK SCALE 26' & 26' LONG A.R.E.M.A.

SCALE N.T.S. | DO NOT SCALE DRAWING | NEXT ASSEMBLY 0862-D001

DR. C WALLS JR. DATE 17 MAY 84

CH. · DATE ·

D

MODEL 2626-80 LPRA-100 | SHEET 1 OF 1 | DWG. NO. 0862-D002 | REV. H

THIS DRAWING IS THE PROPERTY OF THE CARDINAL SCALE MFG. CO. AND SHALL NOT BE USED NOR REPRODUCED EITHER WHOLLY OR IN PART EXCEPT WITH WRITTEN AUTHORIZATION. ALL RIGHTS OF DESIGN OR INVENTION ARE RESERVED.

Generated by Cardinal/Detecto Computer-Aided Drafting System